Emaux

INNOVATIVE DESIGN AND SUPERIOR PERFORMANCE

FOR RESIDENTIAL AND SEMI-COMMERCIAL POOLS

MAX

SERIES SAND FILTERS

Product **Features**

Tank Material

HDPE

Max Operating Pressure

40 psi/2.8 bar

Max Temperature

50°C (122°F)

Suggested Size of Media

0.5-0.8mm

USER - FRIENDLY AND INNOVATIVE DESIGN

Emaux's innovative design and advanced technology offer superior filtration performance and crystal clear water. Max series filters are seamless, one-piece blow-molded filter tank in high density polyethylene for heavy duty use and reliability.

Unique one-piece clamp with screw-type lock design to simplify installation and allows tool-free serving

Equipped with a 6-way multiport valve

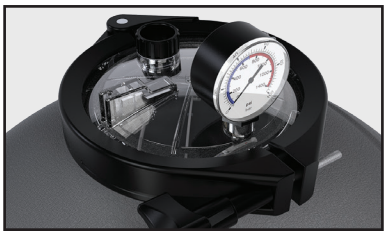

Easy-to-read pressure gauge for inspection

Max Side Mount Filter is equipped with :

1. 6-way multiport valve (1.5"MPV03, 2"MPV04)
2. universal standard of union connection
3. pressure gauge
4. PVC & ABS lateral system
5. piping kit

MAX SERIES SAND FILTERS

Model: MFS24

Max Top Mount Filter is equipped with :

1. 6-way clamp style multiport valve (1.5"MPV07, 2"MPV08)
2. universal standard of union connection
3. pressure gauge
4. PVC & ABS lateral system

Model: MFV17

Max Series

Top Mount Filters (MFV)

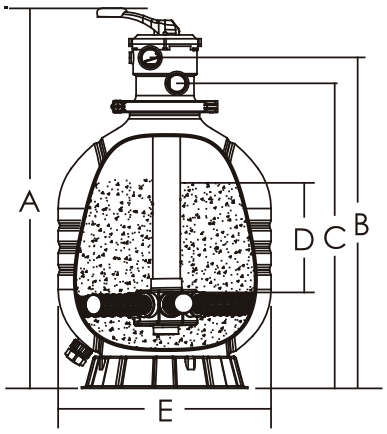

Product Dimensions

Model	A mm	B mm	C mm	D mm	E mm
MFV17	816	695	625	195	425
MFV20	889	772	712	225	500
MFV24	980	860	800	280	600
MFV24B	1032	873	807	280	600
MFV27A	1081	963	903	300	675
MFV27	1133	976	910	300	675
MFV31A	1126	1008	948	370	775
MFV31	1178	1021	955	370	775
MFV35	1296	1139	1073	440	875

Technical Information

Code	Model	Filter Area (m²)	Valve Connections	Max Flow Rate		Sand (kg)
88012526	MFV17	0.14	1.5" / 50mm	117 lpm	7.0 m^3/h	40
88012527	MFV20	0.20	1.5" / 50mm	167 lpm	10.0 m^3/h	70
88012528	MFV24	0.28	1.5" / 50mm	233 lpm	14.0 m^3/h	125
88012545	MFV24B	0.28	2.0" / 63mm	233 lpm	14.0 m^3/h	125
88012529	MFV27A	0.36	1.5" / 50mm	240 lpm	14.4 m^3/h	185
88012530	MFV27	0.36	2.0" / 63mm	300 lpm	18.0 m^3/h	185
88012531	MFV31A	0.47	1.5" / 50mm	313 lpm	18.8 m^3/h	250
88012532	MFV31	0.47	2.0" / 63mm	392 lpm	23.5 m^3/h	250
88012533	MFV35	0.61	2.0" / 63mm	508 lpm	30.5 m^3/h	325

Max Series

Side Mount Filters (MFS)

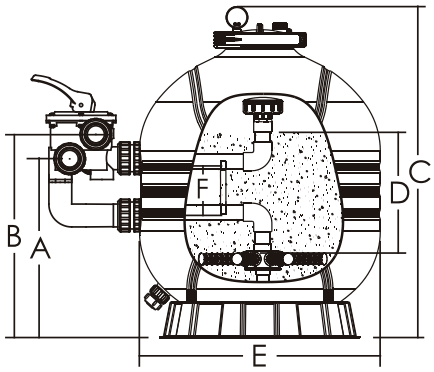

Product Dimensions

Model	A mm	B mm	C mm	D mm	E mm	F mm
MFS17	355	418	670	195	425	125
MFS20	396	549	760	225	500	125
MFS24	430	493	825	280	600	125
MFS27A	480	543	946	300	675	125
MFS27	460	546	946	300	675	130
MFS31A	506	569	968	370	775	125
MFS31	508	594	968	370	775	130
MFS35	564	650	1086	440	875	130

Technical Information

Code	Model	Filter Area (m²)	Valve Connections	Max Flow Rate		Sand (kg)
88012626	MFS17	0.14	1.5" / 50mm	117 lpm	7.0m^3/h	40
88012627	MFS20	0.20	1.5" / 50mm	167 lpm	10.0m^3/h	70
88012628	MFS24	0.28	1.5" / 50mm	233 lpm	14.0m^3/h	125
88012629	MFS27A	0.36	1.5" / 50mm	240 lpm	14.4m^3/h	185
88012630	MFS27	0.36	2.0" / 63mm	300 lpm	18.0m^3/h	200
88012631	MFS31A	0.47	1.5" / 50mm	313 lpm	18.8m^3/h	250
88012632	MFS31	0.47	2.0" / 63mm	392 lpm	23.5m^3/h	250
88012633	MFS35	0.61	2.0" / 63mm	508 lpm	30.5m^3/h	325

EMAUX WATER TECHNOLOGY CO., LTD
ADDRESS: 2/F, Lockhart Centre, No. 301-307 Lockhart Road,
Wanchai, HK
PHONE +852 2832 9880
www.emauxgroup.com

YOUR PREMIER SUPPLIER

ALL SPECIFICATIONS ARE SUBJECT TO CHANGE WITHOUT NOTICE.
© EMAUX WATER TECHNOLOGY CO., LTD. ALL RIGHTS RESERVED.